Edwardian Traditional Towel Warmer

Electric only
955mm height

Front view

955 x 505

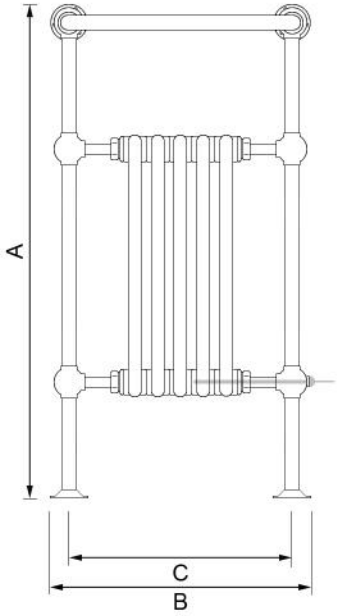

955 x 690

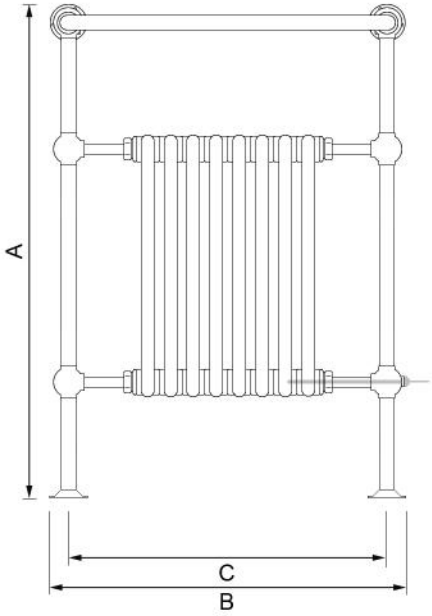

955 x 845

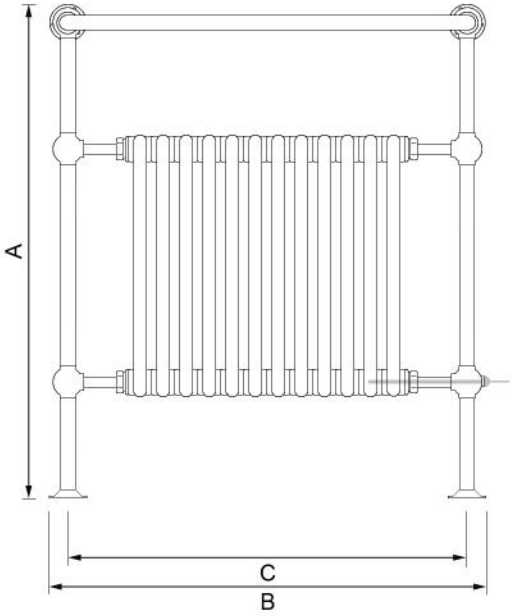

955 x 995

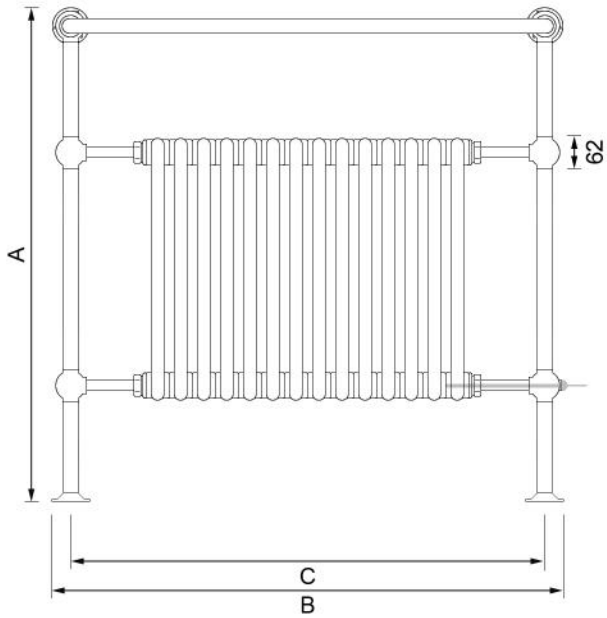

Side view

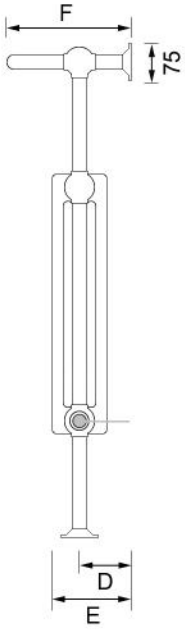

Height (A)	Width (B)	Rail centres (C)	Rail centres (D)	Depth (E)	Depth (F)	Output (watts)	Output (BTU)	Sections	Bar Ø (vertical)
955	505	430	100	154	240	399	1361	5	32
955	690	615	100	154	240	562	1918	8	32
955	845	770	100	154	240	721	2460	12	32
955	995	920	100	154	240	884	3016	14	32

All dimensions in mm

Right hand horizontal element fitting shown