MONTE LOW DEPTH BACK TO WALL WC (MX12)

55 x 36 Cm - 26 Kg - 6/4,5 L.

WC with wall flushing system configured for floor flushing system via plastic spigot bend 6/4,5 l

ECO 4,5 Lt

ECO WATER SAVING PLUS

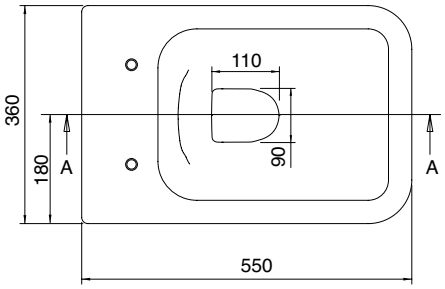

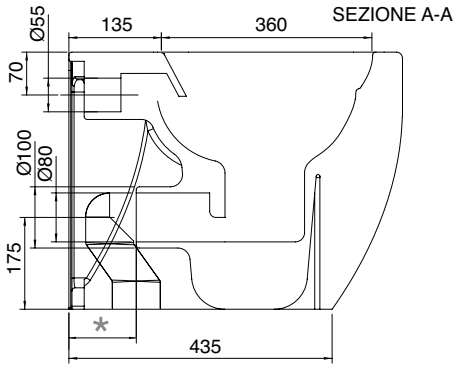

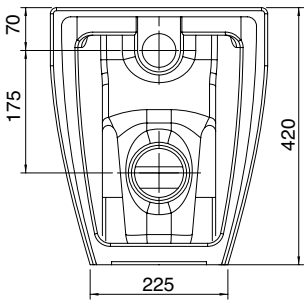

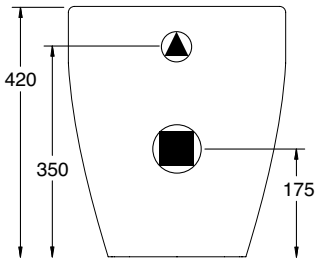

* 60/160 = + ART. 10014/A

* 160/170 = + ART. 10014

*170/215 = + ART. 10014/B

350 ± 15 = + ART. 10028

Tolleranza dimensioni ± 5%

Dimension tolerance ± 5%