LEO CLASSIC WASH BASIN & PEDESTAL (23A)

DIMENSIONS IN MM

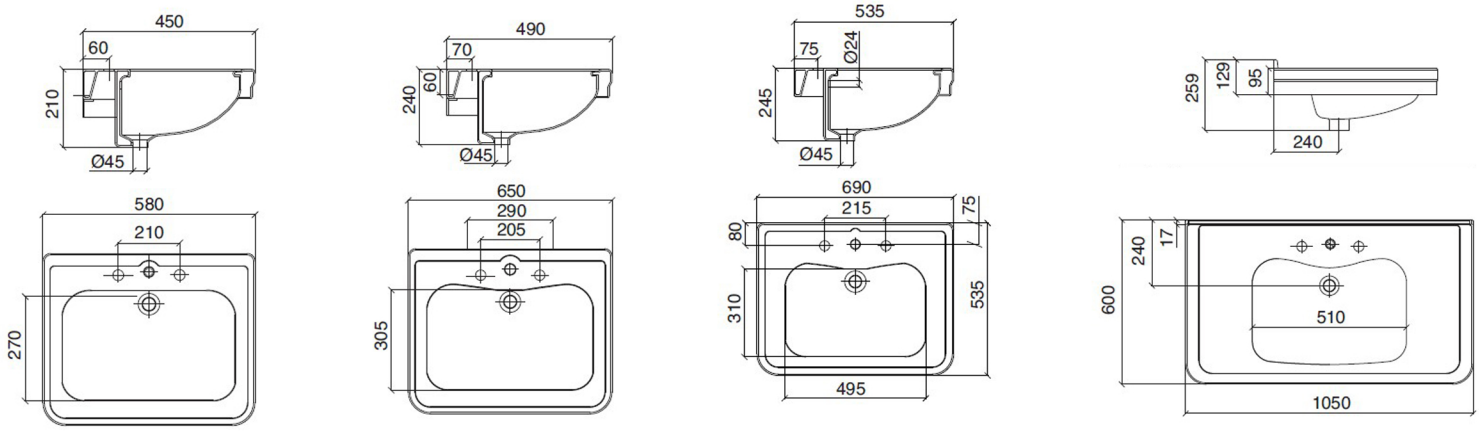

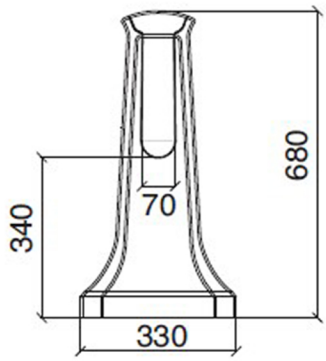

N.B. Indicated size could have a variation of abaut 0,6% due to usure of the moulds or the variations of the materials' technical characteristics used in the mixture.

LIVINGHOUSE.CO.UK

TEL: 01722 415000 EMAIL: SALES@LIVINGHOUSE.CO.UK