Tracks Polished Stainless Steel Towel Radiator (58T)

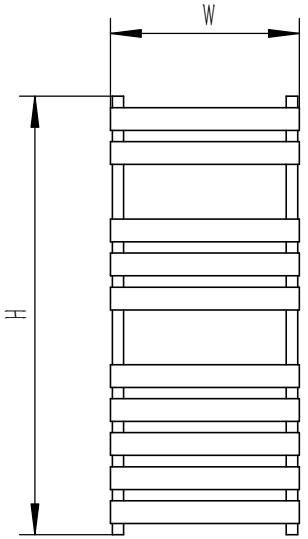

FRONT VIEW

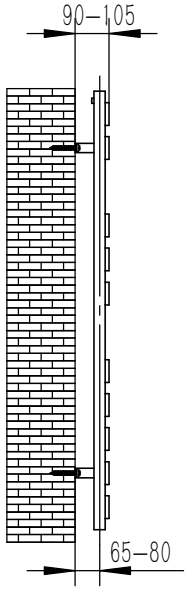

SIDE VIEW

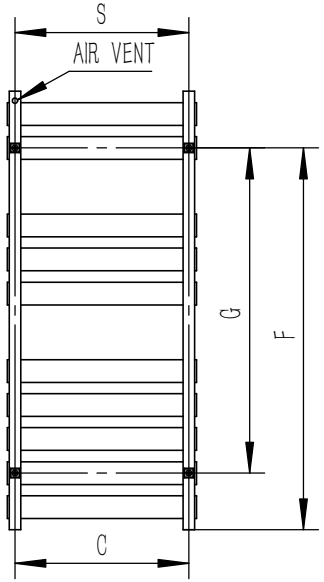

BACK VIEW

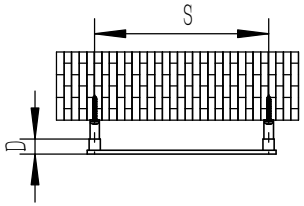

TOP VIEW

SUPPLIED INSTALLATION ACCESSORIES

INSERT 4PCS

SCREW 4PCS

BRACKET 4PCS

WALL PLUG 4PCS

GRAB SCREW 4PCS

SCREW 4PCS

ALIEN KEYS 1PCS

-Vertical Mounting

QUALITY STAINLESS STEEL RADIATOR

-POLISHED

-MAX Operational Pressure:10Bar

-Inlet/Outlet:1/2"Female Pipe Thread

-All Dimensions are in mm

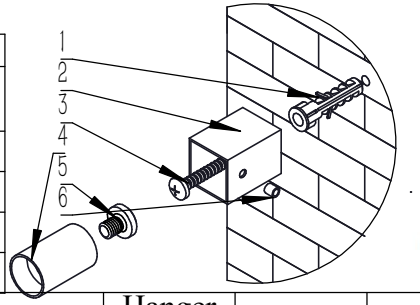

Product Name	**Product Code**	Height	Width	Thick Ness	Plumbing Axes Center to Center	Hanger Axes Horizontal	Hanger To Buttom of the Product	Hanger Axes Vertical	Water Volume	Empty Weight	Thermal Output
		H	W	D	C	S	F	G	-	-	Wat-Btu/hr(Δ50°)
		mm	mm	mm	mm	mm	mm	mm	L	kg	
		780	500	40	460	460	630	480			
		1160	500	40	460	460	1010	860			